83 - MODIFICATIONS IN THE PHYSIOLOGICAL VARIABLE OF THE CORPORAL TERMORREGULATION DURING THE AQUATIC PHYSICAL ACTIVITY

RONALDO ANDRÉ CASTELO DOS SANTOS DE ALMEIDA[1]
MÁRCIO GUIMARÃES[2]
[1]Lab of physiology of exercise Estacio de Sa University Rio de Janeiro/RJ/Brazil
[2]Unyversity Federal Rural of Rio de Janeiro, Seropédica/RJ/Brasil
ronaldocastelo@yahoo.com.br; marcioedf@ibest.com.br

Introduction

The great number of studies concerning the corporal termorregulation supplies an ample database on the physiological reply to thermal stress related to sports outdoor, however still a great gap in the science exists in that it says respect to the mechanisms of corporal termorregulation in aquatic environment. Diverse authors approach this subject, given the importance of its consequences in performance. We know that the rise of the BT takes the loss of liquids, electrolytes and deficiency in the metabolism, factors of utmost importance in the performance. The main occurrences are: reduction of the cardiac debit, reduction in the VO2máx, reduction in the use of substracts.

The loss of BW during the physical activity is resultant of the loss of corporal fluids. Front the practical comments, does not perceive a great ingestion of liquids during aquatic activities, this leads to believe that one of the mechanisms of corporal termorregulation, the evaporation, is little activated, then concrete information on the subject is necessary for the understanding of the organic functions in aquatic sports. If a significant loss of fluids does not occur, this does not represent a main factor that takes the reduction of the performance. In against departure, if a loss of fluids occurs enough to reduce the work carried through during the physical activity, appears new a thematic one for the physiology of the exercise. In this case that, how can we investigate and detect the decurrent alterations of the practical one of exercises in aquatic environment? In this study, we look for to raise information concerning some sanguineous and piss variable, beyond differences in the corporal weight.

Materials and methods

A composed group for 14 men, swimming practitioners, was folloied throughout a period of training in the Miécimo Da Silva Sports Center, located in the city of the Rio de Janeiro/RJ. Amongst the participants of the research, 12 had had its data selected for analysis. In function of the interruption of the trainings for two integrant ones, these had had its discarded data. Diverse practitioners of swimming had been invited to participate of the research in the two months that had preceded the collection of data. The following characteristics would have to be common to the integrant ones: to be of the masculine sex, to swim three times per weekry least, to be abble to carry through the considered training.

To be able to participate of the research, the integrant ones had had that to carry through an anamnese and to fill a term of assent for the accomplishment of the measures. The group was constituted by men with average age of 19,25anos, maximum of 28 years, Minimum of 16anos and Shunting line Standard = 3,84. The collection of data occurred in day 06 of April of 2005, of 07:30h to the 11:30, where the group carried through a training of swimming with duration of 1hour and thirty eight minutes, having covered 3200m in a olimpic swimming pool.

In the day of the collection of data the tested ones had had that to arrive at the place to the 7 hours and 30 minutes so that they were in comment in the 2hour that had preceded the training. All the integrant ones of the sample had made the ingestion of 200ml of water one hour before the beginning of the training being next to the euhidratation, or allowing the elimination of the excess of liquids. Before the beginning of the training, the evaluated ones they had been weighed and they had had that to carry through a collection immediately blood and piss before entering in the swimming pool. All the tested ones were with clothes adjusted for the practical one of swimming and had had ad water libtum in the period of training. BW, blood and piss had been also collected immediately after the training. None of the integrant ones tested had been able to leave the swimming pool in the period of evaluation. The BW was gotten through a scale of high precision. The collection of blood and piss was carried through by technician of nursing and clinical pathology that had used equipment of dismissable clinical procedure. The Tinoco laboratory, in Campo Grande Rio de Janeiro, was responsible for the accomplishment of the blood tests. For the collection of piss a specific container was used where each evaluated collected its material. Piss was analyzed through the reactive ribbon use.

The difference of the BW before and after the training supplies the information regarding the amount of lost fluids, the hematologic analysis is important to detect modifications in the concentration of plasma in the elements serial red and white, and the piss analysis goes to detect modifications how much concentration and PH of piss.

Results

In the following study 26 measures had been evaluated, in the 12 tested. Some measures had been taken before initiating the training after and. A difference in the changeable BW in all was noticed the tested ones, having average of equal of loss of body weight (LBW) 0,71Kg, maximum of equal LBW 1,7Kg and equal minimum of LBW the 0,2. The average water ingestion during the training was of 257,1ml.

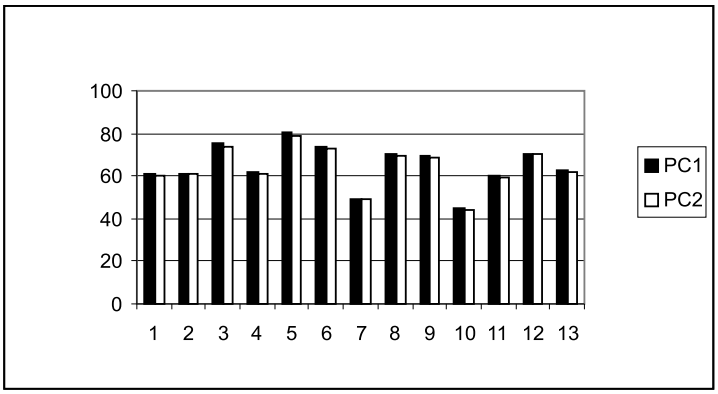

Fig.1. Difference of BW to the end of the training with duration of 1h38min. PC1 corresponds to the initial BW and PC2 corresponds to the final BW.

Another object of our study was the analysis made in piss of the tested ones where if it compared the sample before the training with the sample gotten after the training. An increase of the density of piss, fall PH of piss was verified and the presence of traces of leukocytes in piss, perhaps provoked for a great sanguineous white Globule increase.

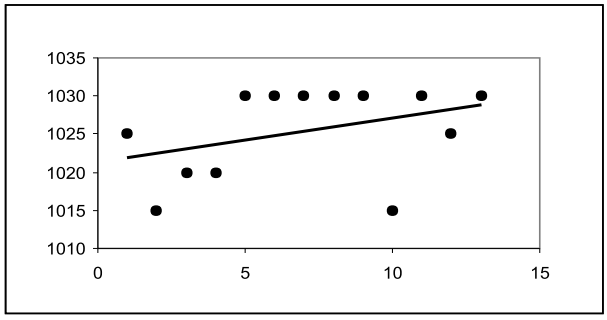

Fig.2. Curve of linear trend of the density of piss after the period of training. The density of piss increased in the ratio of 10/13.

With practical of physical exercise the body it increases its metabolic tax and the increase of the temperature is a factor of addition in the metabolic tax. According to Law of Van't Hoff, for each 1ºC of increase in the TC has an increase of 10% in the metabolic tax. The increase of the metabolism provoked fall in the PH of piss as it can be seen in the figure below.

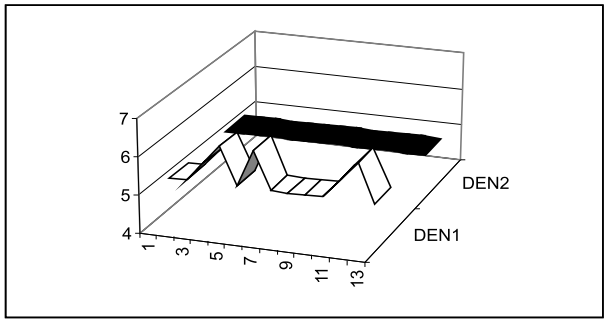

Fig.3. Comparison of the PH of piss before the training and after. To the end all had presented PH = 5, demonstrating fall of the PH in 5/13 of the evaluated ones.

The components serial red after analyzed after training(red globule, Hemoglobin, density of blood, Average Globular Volume, Average Globular of red globule, Concentration of Hemoglobin Average Corpuscular, Distribution of the Width of the red globule) had not had a great modification in its numbers compared with the initial sample. Increase in the number of plaquetas circulating in the majority of the evaluated ones occurred, this event can have occurred for the biggest sistêmica sanguineous circulation and probable increase in the mobilization of the megacariócitos in the óssea marrow, precursory of plaquetas, beyond the function of plaquetas in the inflammatory process, subject that will be boarded more ahead during the quarrel on the action of the immune system and the exercise.

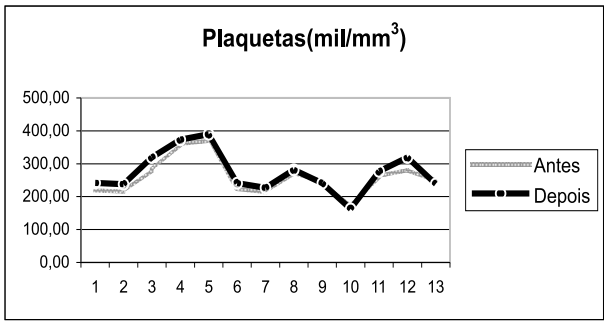

Fig.4. Number of plaquelets in the beginning and the end of the training. 10/13 of the evaluated ones had after had increase in the number of plaquelets circulating the training and swimming.

In the hematologic variable the white series presented an occurrence of great surprise for the study, therefore great rise in the values met in this measure. When compared with the values of the first sample, the Granulócytes had increased in great ratio and to the cells Linfocytes and Monocytes they had diminished, however as measured final we observe a generic increase of the white globule number.

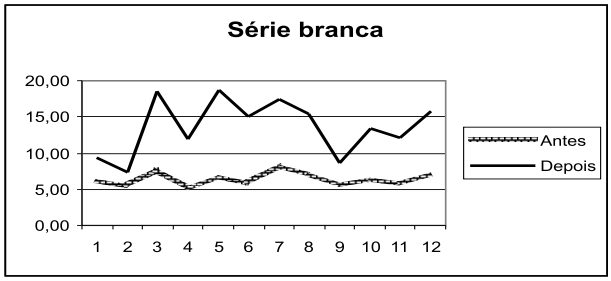

Fig.5. Elements serial white before and to the end of the training. An increase in this 0 variable in all is observed the integrant ones of the sample.

Discussion

The body gains or loses heat for four forms: convection, conduction, radiation and perspiration. Each one of the forms of heat transmission occurs of the body warmest for less warm. The evaporation is, in the majority of the times, the activated mechanism more during the physical activity, therefore the successive muscular contractions necessary to carry through the mechanical work produce great amount of thermal energy. The spare corporal water necessity is above of the 2,5 liters per day for swimmers in regimen of training, however is practically impossible esteem the accurate amount, because of the great number of factors that can affect the hidric loss 8.

The practical one of aquatic activities requires a more careful analysis in that it says respect to the termorregulation. Well it is established that the exercise prematurely is interrupted in heat[4]. In an environment where the body surface is almost all in immersion calls the attention for a question: which form of heat transference occurs in bigger scale between the body and the water? Studies made on cooling techniques show that the immersion in water can be favorable in some previous situations to the physical exercise to delay the appearance of the fatigue, these information can serve to initiate the study. The cooling can result in a lesser competition of the sanguineous flow between the skin and the muscular work during the exercise in the heat, resulting in lesser drift cardiovascular2. The immersion in water seems to favor the termorregulation, however other factors corporal as the behavior of the cardiovascular system and metabolic necessities must be considered.

After the immersion in water with the reduction in the increase in the BT, the necessity of the sanguineous flow in the skin is reduced, with this increases the volume of available blood for the circulation central[4]. Considering the cited effect, one expects that in an exercise practised with the immersed body to the level to clavicular the increase in the BT it is still lesser. How much to the metaolism we Know that the more cold it is the environment where the body if finds, greater will be the necessity of production of heat for maintenance of the BT. This increase of temperature can be one of the factors that contribute exactly for the loss of corporal fluids under the water.

With the detected loss of BW, we can admit similar reactions outside those related with the practised physical activity of the water under strong heat. One of the waited and proven physiological reactions was the increase in the density of piss. With the loss of corporal fluids the organism launches hand of responsible mechanisms for diminishing the loss of fluids and leaves, with this the tax of diurese is diminished. Other studies that speak on cooling techniques compare the adaptation with the immersion in water in corridors and swimmers and show that the exercise in the heat better is tolerated by runners. The physical training in the water does not promote acclimatization to the heat that if extends in training in air, but improves the tolerance to frio1. this affirmation does not consider any improvement in the termorregulation in that it says respect to the increase of the BT.

Research tells the effect of the partial immersion of the body and of the immersion to the level to clavicular(ILC), is considered that the thermal sensation is significantly menor(sensação of cold) and the thermal discomfort is significantly bigger (less comfortable) for ILC and exercise. The partial immersion minimizes the metabolic increase and the negative effect associates the ILC2. The increase in the BT leads to other physiological occurrences beyond the loss of BW. We know little on as the imunologic system answers to exercise[8] in function of the reduced number of research that approaches the subject. Literature supplies the information of that intense training causes a weakness of the system[8, 5]. The immune system has specific actions in the defense of the organism. The innate immunity provides the initial defense, and immunity adquirida(specific) is the reaction more late6. In that it concerns to the present study, what in it interests them at this moment is the initial defense of the organism.

The number of plaquelets to the end of the exercise was bigger of the one than the values found in the initial sample. The increase of the sanguineous flow can have provoked this increase. Plaquelets is fragmentos of joined bond cells marrows and is associates the processes where tecidual injury occurs. The physical exercise provokes microinjuries in the muscular fiber. The number and the size of these microinjuries are increased proportionally with the intensity of the exercise. A hypothesis for the increase of circulating granulocytes is based increase in the number and the size of the injuries provoked during the executed training. The recital of this hypothesis is in the characteristics that define an inflammation, amongst which is distinguished the number of microinjuries, the dilatation of the sanguineous vases and consequent increase of the local sanguineous flow, increase of the permeability of the capillaries and edema tecidual. These events occur in the inflammation and are common to the exercise of high intensity as what it was carried through.

Considering that the tissue macrophages are the first line of defense of the organism and the neutrofiles they are the second[3], appearing precociously in the inflammation small farms9, the first sanguineous modification would be explained: normally, about three times the number of circulating granulocytes in the total blood they are stored in the bond marrow[3], waiting to be used in case that it has reply fast necessity[1, 3]. Products of the inflammation that pass to the sanguineous chain, are carried to the bond marrow and act in the capillaries of marrow and the stored granulocytes, mobilizing them immediately for the blood flow[3].

The analyzed elements serial red had not suffered related significant modifications to some specific factor from the exercise. The study it looked for to raise information on a new subject. Bigger details as the BT, temperature of the water and some changeable biochemists of the blood would be of great importance to be measured and analyzed to give a bigger support to this subject. Detailed studies more, with one show greater and most definite they are necessary. The absence of specific studies on the body termorregulation in physical exercises in the water limits the look of science in the field of the physiology of the exercise. Studies on imunologic system and exercise also are necessary to better understand the behavior of the organism front to the physical exercise.

Conclusion

In the present study we show the influence of practises of swimming in the loss of corporal liquids, where it was arrived conclusion of that it exists this loss and it raises the concern with the hidration in this type of activity to prevent factors that will go to influence in the performance level. How much the participation of the termorregulador center, we observe that activation of responsible mechanisms for the elimination of the heat occurs that promote loss of corporal liquids. The loss of liquids is not given for the same process that occurs in exercises billboard. The convection of the water on the body acts assisting the maintenance of the BT, however the INC. is not enough to prevent and loss of corporal fluids. Other information gotten in the study are referring to the immune system and its performance during the exercise. The exercise is a factor that influence directly in the innate and responsible immunity for the modification in the circulating white frame number in the blood. The intensity of the exercise directly reveals proportional to the number and/or size of the muscular microinjuries as well as in the circulating number of plaquelets.

References

1. Abbas, A. K.; Lichtman, A. H.; Pober, J. S. Imunologia celular e molecular. 4. ed. Rio de Janeiro: Revinter, 2003.544p. p. 274; 343.

2. Andrea T. W.; Scott L. D. Thad E. W.; Metabolic, thermoregulatory, and perceptual responses during exercise after lower vs. whole body precooling. J Appl Physiol 94: 1039-1044,

3. Guyton, A. C.; Hall, J. E. Tratado de fisiologia médica. 9. ed. Rio de Janeiro: Guanabara Koogan, 1997. 1014p. p. 398; 401.

4. Marino, F. E. Methods, advantages, and limitations of body cooling for execise performance. Br J Sports Med 36:89-94, 2002.
5. Mc Ardle, W. D.; Katch, F. I.; Katch, V. L. Fisiologia do exercício Energia, nutrição e desempenho humano. 5. ed. Rio de Janeiro: Guanabara Koogan, 2003.1113p. p. 456 101; 636 661.
6. Maglischo, E. W. Nadando Ainda Mais Rápido. 1. ed. São Paulo: Manole, 1999. 615 p. p.
7. McMurray, R. G.; Horvath, S. M. Thermoregulation in swimmers and runners. *J Appl Physiol* 46: 1086-1092, 1979.
8. Powers, S. K.; Howley, E. T. Fisiologia do exercício Teoria e aplicação ao condicionamento e ao desempenho. 1. ed. São Paulo: Manole, 2000. 527p. p. 242; 405.
9. Roit, I.; Brostoff, J; Male, D. Imunologia. 5. Ed. São Paulo: Manole, 1999. 423p.

MODIFICATIONS IN THE PHYSIOLOGICAL VARIABLE OF THE CORPORAL TERMORREGULATION DURING THE AQUATIC PHYSICAL ACTIVITY

Abstract

The alterations in body temperature(BT) are responsible for diverse organic reactions. The intention of this study is to verify if loss of corporal fluids in exercises practised in the water occurs and to detect possible alterations in the sanguineous components. For the study had been evaluated 12 men with average age of 19,25 years, swimming practitioners. They had been folloied during a training with duration of 1H38minutes. The measures of weight corporal(PC) and collection of blood and piss had been carried through before and after the training and had been compared. The results had shown reduction of the average PC, increase in the evaluated density of piss in 10/13, reduction in the evaluated PH in 5/13, increase in the number of peripheral platelets number in 10/13 evaluated and average white globule increase of 110,8%.

MODIFICATIONS IN THE PHYSIOLOGICAL VARIABLE OF THE CORPORAL TERMORREGULATION DURING THE AQUATIC PHYSICAL ACTIVITY

Resumé

Les changements du température corporelle (TC) de la température sont responsables des réactions organiques diverses. L'intention de cette étude est vérifier si la perte de fluides corporelles dans les exercices pratiqués dans l'eau se produit et de détecter des changements possibles des composants sanguineous. Pour l'étude l'âge moyen de 19.25 ans avait été évalué 12 hommes Co, nageant des praticiens. Ils avaient été folloied pendant une formation avec la durée de 1H38minnutos. Les mesures du corporal(PC) de poids et de la collection de sang et la pisse avaient été réalisées avant et après la formation et comparées. Les résultats avaient montré la réduction du PC moyen, l'augmentation de la densité évaluée de la pisse de 10/13, la réduction du pH évalué de 5/13, l'augmentation du nombre de plaquetes circulant de l'augmentation blanche évaluée et moyenne de 10/13 de globule de 110.8%.

MODIFICATIONS IN THE PHYSIOLOGICAL VARIABLE OF THE CORPORAL TERMORREGULATION DURING THE AQUATIC PHYSICAL ACTIVITY

El summario

Las alteraciones en la temperatura corporal(TC) son responsables de reacciones orgánicas diversas. La intención de este estudio es verificar si ocurre la pérdida de líquidos corporales en los ejercicios practicados en el agua y detectar alteraciones posibles en los componentes sanguineous. Para el estudio la edad media de 19.25 años había sido evaluada 12 hombres co, nadando a médicos. Habían sido folloied durante un entrenamiento con la duración de 1H38minnutos. Las medidas del corporal(PC) del peso y de la colección de sangre y el piss habían sido llevados a través antes y después el entrenamiento y comparados. Los resultados habían demostrado la reducción de la PC media, el aumento en la densidad evaluada del piss en 10/13, la reducción en el pH evaluado en 5/13, el aumento en el número de los plaquetas que circulaban en el aumento evaluado y medio de 10/13 del glóbulo blanco de el 110.8%.

MODIFICAÇÕES NAS VARIÁVEIS FISIOLÓGICAS DA TERMORREGULAÇÃO CORPORAL DURANTE A ATIVIDADE FÍSICA AQUÁTICA

Resumo

As alterações na temperatura corporal(TC) são responsáveis por diversas reações orgânicas. O propósito deste estudo é verificar se ocorre perda de fluidos corporais em exercícios praticados na água e detectar possíveis alterações nos componentes sanguíneos. Para o estudo foram avaliados 12 homens co idade média de 19,25 anos, praticantes de natação. Foram acompanhados durante um treinamento com duração de 1H38minnutos. As medidas de peso corporal(PC) e coleta de sangue e urina foram realizadas antes e depois do treinamento e foram comparadas. Os resultados mostraram redução do PC médio, aumento na densidade da urina em 10/13 avaliados, diminuição no PH em 5/13 avaliados, aumento no número de plaquetas circulantes em 10/13 avaliados e aumento médio de glóbulos brancos de 110,8%.