155 - THE TEACHING OF THE FUNDAMENTALS OF MODALITY HANDBALL THROUGH GAMES AND JINKS POPULAR.

JOSÉ ROBERTO ALVES ARAÚJO[1,2]
ELTON BARROS DO NASCIMENTO[1,2]
CASSIO HARTMANN[1,2]
ARNALDO TENÓRIO DA CUNHA JÚNIOR[2,3]
1. DOCENT OF THE OFFICE FEDERAL DE ALAGOAS - CAMPUS MACEIÓ/ AL - BRAZIL.
2. EURO-AMERICAN PROGRAM POST-GRADUATION STRICTO SENSU IN HEALTH PEDAGOGY OF SPORTS AND MEDICINE OF SPORT CATHOLIC UNIVERSITY NUESTRA SEÑORA DE LA ASUNCIÓN – UC
3. PRIVATE DOCENT AT UNIVERSIDADE FEDERAL DE ALAGOAS - CAMPUS ARAPIRACA / AL - BRAZIL.
joserobertoaa@globo.com

INTRODUCTION

This article aims to present a methodological approach for the development of classes Handball taught by a physical education teacher in the 1st, 2nd, 3rd and 4th years of high school Integrated Office Federal de Alagoas - Campus Maceió in the years 2009 and 2010.

The central idea of teaching the Office Federal de Alagoas - IF / AL is to unite the area of general education to vocational education enabling a comprehensive, supported axes: work, science and culture aiming at the development of the individual, providing conditions for studies on the practice of physical activity, taking into account the teaching of cultural diversity, and also enter the world of work, either as an employee, either as an entrepreneur of his own business.

Leisure-recreational perspective, the strategy was implemented as the direct participation of students in the process of redemption games and popular games, as follows: First, each student researched and brought in writing or playing a game popular to be applied in traditional format, this work came in written form stating the rules, how to run the place and the time it took place. Secondly, these activities were studied by students with teacher guidance, to be developed some modifications and adjustments, turning them into other forms of execution.

According to Moraes (2004), we need to get away from the traditional paradigm of education that is committed to the past with things that can not be forgotten, that gives greater emphasis to conformity, who does not realize the constructive side of the error, which attempts to eliminate and freedom of expression. We need more than ever, a new educational model that, besides helping to being formation, also to recognize learning as a complex process in permanent construction, which depends on the actions and reactions of one who knows it depends on what happens in its embodiment, the structural changes that occur in the autopoietic organization, the mutual influences between the individual and the environment where it operates. A paradigm that contributes to the integral formation of learner, capable of bringing education to life and bring a little more life into our classrooms.

In reality, we need new teaching guidelines to help us recognize that it is time for a new education, a new dialogue, new partnerships and new alliances. It is time for new challenges and new values, the birth of new cultures, the emergence of a new consciousness, opening time for new knowledge and new times to announce the beginning of this millennium. It is time to re-enchant education!

For Castro (2008), high school, meeting place of many contradictions in Brazilian education system has other roles, one can say that is a level in permanent crisis. The major problem of secondary education is to prepare half of the students for work and half to higher education. These two things differ, with greater distances between values and attitudes in each of the functional options. The school inherits all the problems of quality of basic education and adds to them new model in the world: there are no alternative routes or between schools with different profiles (European model) or the possibility of taking different paths within the same school (American model). There is wide debate about the solution to our school.

Higher education receives the student with these problems, with little initiative to change what is in their reality, without a creative attitude, and with a duty to modify it. Therefore it behooves us that follow teacher education, try to minimize this educational gap with innovative pedagogical practices.

We present four examples of this practice: the first time in the traditional manner and the second time using an adapted form as a strategy.

Example 1.

The Owner of the Street, in Maceió - AL (elsewhere: Mother of the Street)

Description: The game "Lord of the Street" is the traditional way: the teacher chooses a student to be the "main street", all other students are before the court from the sideline by jumping on one foot (sidewalk) and may walk or run with both feet, just inside the court (street). The goal is to try to move from side to side of court (street), without the "main street" feel to it. The student who is touched by the "main street", it helps to get the others and so on. The game ends when all students have been touched.

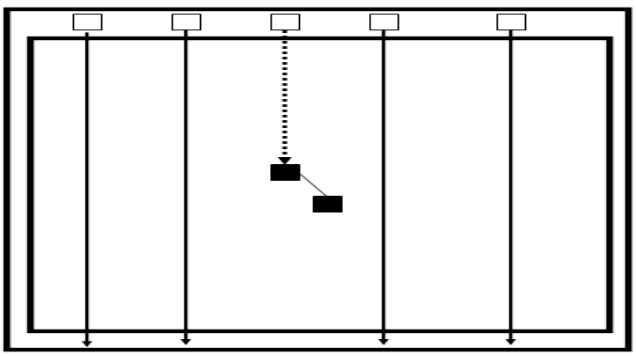

The owner of Street Ball (adaptation):

Description: The game takes place in the same way that the game previously mentioned, the difference is that each student, except the "main street" will be with a ball, and that will be hitting the ball (dribbling). If the "main street" get (touching) a

player, it leaves the ball outside the court and helps the "main street" to catch (touch) the others.

Variation: It's the same way as the previous games, the difference is that the "main street" that will be hitting the ball (dribbling) the whole time while trying to catch the other players who will be without the ball and if the "main street "touch a player, it picks up a ball and hitting the ball (dribbling) helps the" main street "to get the other players and so on. The game ends when all players have been struck.

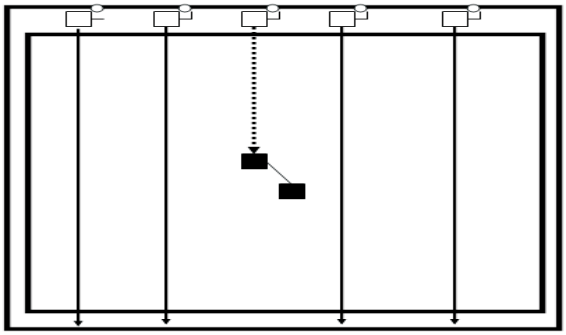

In this activity, we put emphasis on decision making (choosing the right moment to cross the street), the body area to deselect (feint) and adaptation to the ball (which is the knowledge and familiarity with the implement of the game - the "ball" , finding the area of the same, their trajectories, speeds, time and space relationship, grip, ball handling, etc...)

Example 2.
Steals Flag, Maceio - AL (elsewhere: Pique Flag, Bar Flag, Flag Pira):

Description: The flat block will be divided into two sections by a center line and with a local bounded to the flag (eg, the area of Handball can be called heaven, got it, or chop), students will be divided into two teams and, if possible, with equal number of members, each posted one on each side of the court. The goal is to get the flag (flag, shoe, ball) and bring opponents to their side of the court without being touched. When a member is touched even without the flag should stand (standing, squatting or sitting) and can only rejoin the game when a member of your team get to touch it. When a player in possession is touched, it will be stopped and returns the ball to where it was (in the sky, digs at the top). The player that you arrive at the "flag" opponent (in the sky, digs at the top), can not be touched, can only be touched when it enters the playing court the opponent. Marks the point the team that can pass the flag of the court is contrary to his side of the court first.

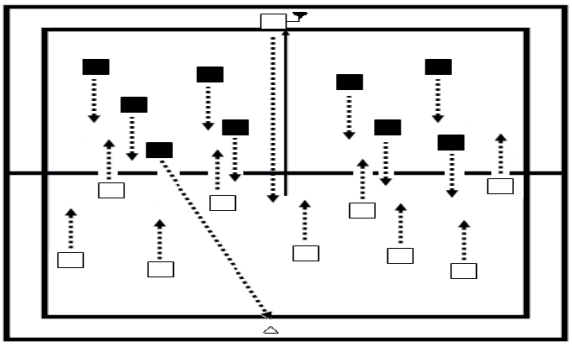

Flag steals with three flags and passes (adaptation):

Description: The game takes place in a similar way to rob from Flag (Capture the Flag, Flag Bar) traditional, the difference is to be placed three "flags" (balls) on each side of the opponent's court. Example: a "flag" at the bottom (within the area of Handball) and two sides within arcs (hula hoops) after the court boundaries. The court shall be divided into two sections by a center line students will be divided into two teams, and if possible with equal number of members, posted on either side of the court. The goal is to get the "flags" (balls) and bring opponents to their side of the court without being touched. When a member is touched, it should stand (standing, squatting or sitting) and can only rejoin the game when a member of your team get to touch it. When a player in possession is touched, it will be stopped and returns the ball to where it was (in the sky, digs at the top). The player that you arrive at the "flag" opponent (in the sky, digs at the top), can not be touched, can only be touched when it enters the playing court the opponent. Marks the point the team that can pass all the flags of the court is contrary to the court, in front of another team. You must replace three passes before returning with the flag of the opposing side to his field.

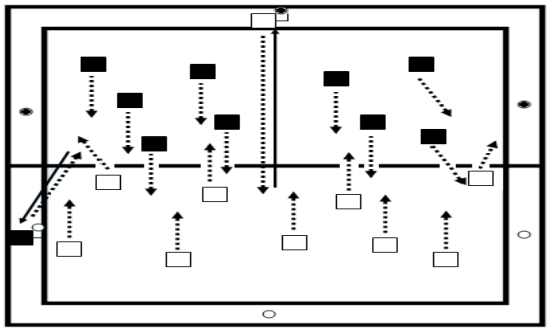

We use a strategy game very dynamic and well known, we made some significant adjustments to the game: Steal the

Flag traditional, beyond the movements of selection and deselection of players, we observe the decision-making and speed of reasoning to defend and attack at the time without timely precipitate actions and make unnecessary movements. We introduce the passes and receptions for developing these submissions and stimulate the thinking of team play from the players. These attitudes are of paramount importance to achieve the goals of this popular game, which is scoring and prevent infiltration of the opponents, defending your court.

Example 3.

Seven Stones, Maceio - AL:

Description: Divide the class into two groups, each at one end of the court. They get the seven stones (in rectangular shape and one above the other) in the middle of the block, group A will play the ball and try to hit the rocks, where at least drop a stone will have to run the court and Group B will aimed at catching the ball and burn the players in Group A before he can put the stones in place (one on top of another). Who is burned is still waiting to be rescued by a teammate (being played). Mark the point that the team put the stones in place or the team that burn all foes.

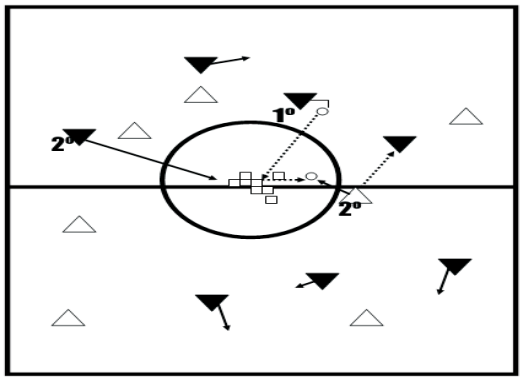

It works hand-eye coordination, manipulative ability, stabilization, sports and community.

Ball in the Tower (adaptation)

Description: A court will be divided into three fields, using the center circle and the circle formed by the "bottles" of basketball. Students will be divided into two teams of as many members, for each circle. In the middle of each circle is placed a cone that represents the "castle." The goal of the game is, exchanging various types of passes with his companions, trying to topple the cone. Will not be allowed any participant to enter the circle. The activity lasts about fifteen minutes. When the team that is defending retrieve the ball, it starts attacking and attacking team that was going to defend. Variations: The activity can start with your hand and then with the foot and using balls of different modalities.

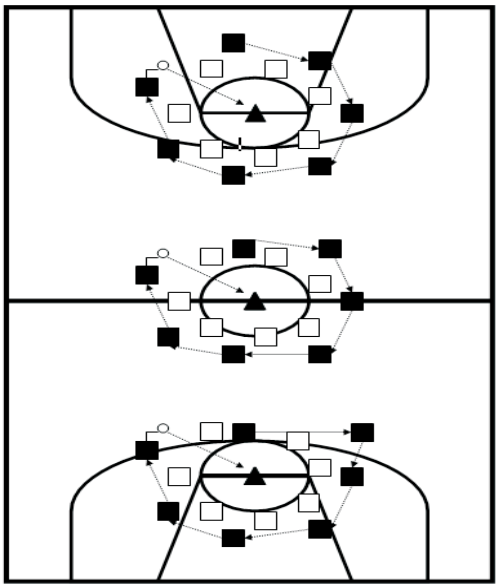

Develops motor skills, manipulative ability of stabilization (Seven Stones), aiming, passing, receiving, dribbling and shooting.

Example 4.

The Game of Dodgeball, Maceió-AL (elsewhere: Burned, Shot)

Description: The students will be divided into two teams, the playing field is a rectangle 20 x 10 m, dividing it in half, each team will be posted on one side of the field (we use the block Volleyball - 18 x 9 m). The goal is to hit the ball with players of opposing teams that run close to the bottom line, the ball can be thrown to the centerline, the player who is hit will be considered "burned" and moves with the ball to the end of the opponent, after the bottom line of it. Once burned, the player continues playing the game controlling the ball with his companions or burning opponents who should run near the center line, the burning can throw the ball to the bottom line. The winner is the team that burn all players from another team.

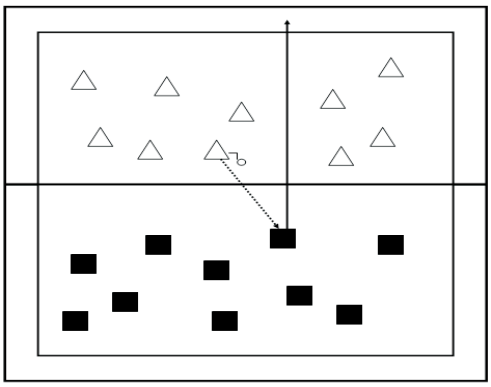

Burned with a goal (adaptation):

Description: The students will be divided into two teams, the playing field is a rectangle about 20 x 10 m, dividing it in half, put two large cones to make the beacons at the intersection of the sidelines with the bottom line (a goal in each field), each team will be posted on one side of the field, players can go anywhere in your field (you can use the volleyball court - 18 x 9 m). The goal of the game is to score the goal of the opposing team, the ball can only be thrown to the centerline, the goal is only valid if the ball crosses the endline, and the height of the cone (goal); all goalkeepers and players are pitchers. The winner is the team that scores the most goals on time, or if it is established that the match is completed in a given score, the size of the beam (beacon) may vary depending on the number of players.

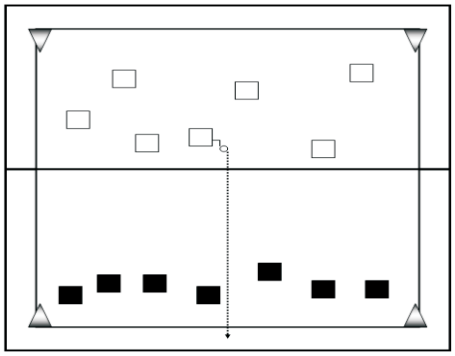

We start with the idea of the game and created the traditional Burned Burnt with Gol, we introduce the cues for the marking of points needed to determine a winner in the game. This new format of play motivates and certainly attracts more participants with a different goal of burning the opponent (many are afraid to take a lump sum), the game becomes more participatory and inclusive. In this approach the game "Burned with Gol", the players can see the desire to defend the goal and attack the opposing team with a group thinking and sharing of tasks, and also the emergence of some passes - important prerequisites for the development and understanding of other forms of multiplayer games that will participate.

Example 5.

Hopscotch, Maceio (in some cities is also called a plane):

Description: The game consists of jumping on a drawing as an airplane or snail, scratched in chalk or stone, the design has squares or rectangles numbered 1 to 9, and on top of a place called heaven in the form of a circle or oval. We choose the player who will start, the player who throws a stone will start that can be caught using only one hand, initially in a house number, and set within its boundaries, then jumps with one foot in simple houses and with two double houses, avoiding the house that has the pebble. Arriving at the sky, stepping in with both feet and return to the top jumping the same way until the second house, where the player must take the pebble from the floor without losing balance, and jump back to the starting point. If the player does not make mistakes along the way, throws a pebble into the house 2, repeating the whole process and so on through all the houses. If the same stride, placing his hand on the floor or stepping outside the boundaries of the houses, the player passes the turn to the next, returning to play the point at which the missed your turn comes again. Who wins the first game reach the sky. In another version, more complex, the game does not end there, who can reach the sky turns his back and throws a stone from there to the house where she becomes his fall and there is writing his name (if not hit any passes the next player's turn). In those homes with the "owner", no other player can step only the owner can step in with both feet including this release, wins the game who get to be the owner of most homes.

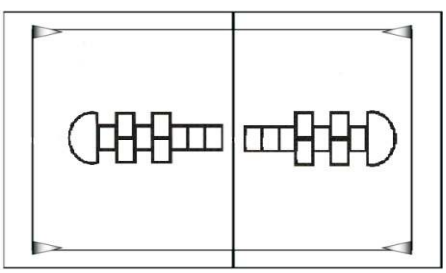

Hopscotch with the pace and phase Shooting (adaptation):

Description: The game consists of jumping on a design scratched in chalk or arcs (hoop) placed on the floor, the design features simple neighboring houses numbered from 1 to 3 double and a home away from about 1.5 to 2 meters front of simple houses. The player performs a jump ball with one foot in the homes using the simple sequence is established, for example: right foot, left foot and right foot and shot a goal Handball placed about 90 to 10 feet away Double the house.

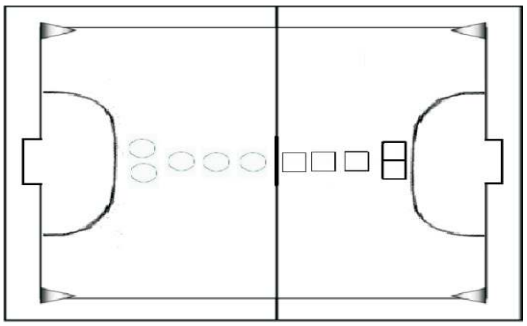

CONCLUSION

With the evaluation of this methodology, perspective novelty recreational deployed as a strategy of teaching the technical fundamentals of the sport handball in lessons taught by a physical education teacher in the 1st, 2nd, 3rd and 4th years of high school Integrated Office Federal de Alagoas - Campus Maceió in the years 2009 and 2010, we conclude that the games and popular games contribute to the formation of the individual, they offer several ways to solve problems, making decisions and devising new ways from a primitive form.

Games and popular games can be a symbolic representation of life, and through them, you can create the habit of physical activity, respect rules, neighbors, the socializing, bringing people together. Forms, so a generation based on principles of brotherhood, solidarity, cooperation, co-education and taking physical education as the linchpin of that process, from the perspective of social values and teaching the game and play as a means of popular education.

Hopefully this will provide a contribution to assist the work of educators in day-to-day of school, in particular, physical education teachers. In this study, the students began to have a different view in relation to physical education classes and therefore different perception of Physical Activity. This change in perception reflects the education of students, and although we can not say that the brief period of intervention have changed the identity of students, certainly recorded a contribution to an awakening, a fresh look at yourself and each other.

We also believe that further studies on the subject and Games Popular Games as pedagogical practice for teaching fundamentals in various sports may arise and bring a great contribution to their development, both in the aspect of the game itself, as in the social aspect.

REFERENCES

ARAÚJO, José Roberto Alves et. al. THE SCHOOL OF PHYSICAL EDUCATION COURSE OF COMPUTING THE FEDERAL INSTITUTE OF EDUCATION, SCIENCE AND TECHNOLOGY ALAGOAS - MACEIO CAMPUS. "A PLAYFUL APPROACH, RECREATION. FIEP BULLETIN - Vol. 80 - Special Edition - ARTICLE I - 2010.

CASTRO, Claudio de Moura. Secondary education: an orphan of ideas, heir of misunderstandings. endorsement. pol. públ. Educ., Rio de Janeiro, v. 16, n. 58, p. 113-124, Jan. / Mar. 2008.

CAVALLARI, Vinicius Ricardo. Working with Recreation. New York: Icon, 2005. MORAES, Maria Candida. Mito Education From the New Paradigms of Science. PUC / SP / Brazil. Oct/2004.

S. C. Darido., L. A. FERREIRA,; Z. GALVÃO, G. H. BRIDGES, and G. N. S. RAMOS,, I. C. A. RANGEL,, L. H. RODRIGUES,; L. SANCHEZ NETO,; E. V. M. SILVA. Book Review Educational Practice. Rev. Bras. Cienc. Sports, Campinas, v. 23, n. 2, p. 195-205, jan. 2002.

KISHIMOTO, Tizuko Morchida. The Play and Early Childhood Education. Thompson Learning Thomson Learning. 2003.

Parque Res. Flamboyant, rua B, nº 87 – Serraria – fone: 82-9983-6236
CEP. 57.046-270
Maceió – Alagoas

"THE TEACHING OF THE FUNDAMENTALS OF MODALITY HANDBALL THROUGH GAMES AND JINKS POPULAR".

ABSTRACT

This pedagogical practice is aimed at presenting a methodological approach for the development of classes Sports Initiation in the sport of Handball, taught by a physical education teacher for students in the classes of 1, 2, 3 and 4 years of High School Integrated Federal Institute of Alagoas - Maceió Campus in the years 2009 and 2010. The practice has happened on two occasions, at first, each student researched and brought in writing or playing a game popular to be applied in its traditional format, and secondly, these activities were modified and adapted, transformed into other forms execution. The central idea of the purpose of this study is to unite the field of general education to vocational education enabling a comprehensive, aiming at the development of an individual, allowing a recovery of body culture in the region where the student is entered, and taking into account the teaching in cultural diversity. With the evaluation of this methodology perspective novelty recreational deployed as a strategy of teaching Handball, we conclude that the games and popular games contribute to the formation of the individual, they offer several ways to solve problems, making decisions and preparing in new ways from a primitive form. Forms, so a generation based on principles of brotherhood, solidarity, cooperation, co-education and physical education as having the axis of that process, from the perspective of educational and social values with the game and play as a means of popular education.

KEYWORDS: Physical Education, Methodology, Handball, Culture, Fun Games and Recreation.

"L'ENSEIGNEMENT DES FONDEMENTS DE LA HANDBALL MODALITE TRAVERS DES JEUX ET JINKS POPULAIRE"

RÉSUMÉ

Cette pratique pédagogique est destinée à présenter une approche méthodologique pour le développement des classes d'initiation sportive dans le sport de Handball, enseignée par un professeur d'éducation physique pour les élèves des classes des années 1, 2, 3 et 4 de l'école secondaire intégrée Institut fédéral de la Alagoas - Maceió Campus dans les années 2009 et 2010. La pratique s'est produit à deux reprises, d'abord, chaque élève des recherches et mis par écrit ou en jouant à un jeu populaire à être appliqué dans sa forme traditionnelle, et d'autre part, ces activités ont été modifiés et adaptés, transformés en d'autres formes d'exécution. L'idée centrale de l'objectif de cette étude est d'unir le domaine de l'enseignement général à la formation professionnelle permettant une approche globale, visant au développement d'un individu, permettant une reprise de la culture du corps dans la région où l'étudiant est inscrit, et en tenant compte de l'enseignement dans la diversité culturelle. Avec l'évaluation de cette nouveauté perspective méthodologie de loisirs déployé en tant que stratégie d'enseignement Handball, nous concluons que les jeux et les jeux populaires contribuent à la formation de l'individu, ils offrent plusieurs façons de résoudre les problèmes, prendre des décisions et préparer de nouveaux moyens d'un forme primitive. Les formes, si une génération fondé sur des principes de fraternité, de solidarité, de coopération, la co-éducation et l'éducation physique comme ayant l'axe de ce processus, du point de vue des valeurs éducatives et sociales avec le jeu et le jeu comme moyen d'éducation populaire.

MOTS-CLÉS: éducation physique, méthodologie, Handball, de la Culture, des jeux et des loisirs.

"LA ENSEÑANZA DE LOS FUNDAMENTOS DE BALONMANO MODALIDAD A TRAVÉS DE JUEGOS Y JOLGORIO POPULAR".

RESUMEN

Esta práctica pedagógica tiene como objetivo presentar un enfoque metodológico para el desarrollo de las clases de Iniciación Deportiva en el deporte del Balonmano, impartida por un profesor de educación física para los estudiantes en las clases de los años 1, 2, 3 y 4 de Bachillerato Integrado Instituto Federal de Alagoas - Maceió Campus en los años 2009 y 2010. La práctica ha sucedido en dos ocasiones, al principio, cada estudiante investigado y llevado por escrito o jugar un juego popular que se aplicarán en su formato tradicional, y en segundo lugar, estas actividades se han modificado y adaptado, transformado en la ejecución de otras formas. La idea central del objetivo de este estudio es unir el campo de la educación general a la formación profesional que permita una completa, con miras a la elaboración de un individuo, permitiendo una recuperación de la cultura del cuerpo en la región donde está inscrito el estudiante, y teniendo en cuenta de la enseñanza en la diversidad cultural. Con la evaluación de esta novedad perspectiva metodología lúdica implementado como una estrategia de enseñanza del balonmano, llegamos a la conclusión de que los juegos y los juegos populares contribuyen a la formación del individuo, que ofrecen varias maneras de resolver problemas, tomar decisiones y la preparación de nuevas maneras de un forma primitiva. Formas, por lo que una generación basada en los principios de la fraternidad, la solidaridad, la cooperación, la coeducación y la educación física que tiene el eje de ese proceso, desde la perspectiva de los valores educativos y sociales con el juego y jugar como un medio de educación popular.

PALABRAS CLAVES: Educación Física, Metodología, Balonmano, Cultura, Diversión Juegos y Recreación.

“O ENSINO DOS FUNDAMENTOS DA MODALIDADE HANDEBOL ATRAVÉS DE JOGOS E BRINCADEIRAS POPULARES”.

RESUMO

A presente prática pedagógica tem como objetivo apresentar uma abordagem metodológica utilizada para o desenvolvimento das aulas de Iniciação Esportiva na modalidade de Handebol, ministradas por um professor de Educação Física para os alunos das turmas dos 1º, 2º, 3º e 4º ano do Ensino Médio Integrado do Instituto Federal de Alagoas – Campus Maceió nos anos de 2009 e 2010. A prática se deu em dois momentos, num primeiro momento, cada aluno pesquisou e trouxe por escrito um jogo ou brincadeira popular para ser aplicado na sua formatação tradicional, e num segundo momento, estas atividades foram modificadas e adaptadas, transformando-se em outras formas de execução. A idéia central da proposta do presente estudo é unir a área de formação geral à profissionalizante possibilitando um ensino global, visando o desenvolvimento integral do indivíduo, possibilitando um resgate da cultura corporal da região onde o aluno está inserido e levando em consideração a ação docente na diversidade cultural. Com a avaliação desta metodologia numa perspectiva lúdico-recreativa, implantada como estratégia do ensino do Handebol, concluímos que os jogos e as brincadeiras populares contribuem na formação integral do indivíduo, pois oferecem diversas formas na resolução de problemas, nas tomadas de decisões e na elaboração de novas maneiras a partir de uma forma primitiva. Formaremos, assim, uma geração pautada em princípios de fraternidade, solidariedade, cooperação, co-educação e tendo a Educação Física como eixo condutor desse processo, através da perspectiva de valores sociais e pedagógicos tendo o jogo e as brincadeiras populares como um meio de educação.

PALAVRAS-CHAVE: Educação Física, Metodologia, Handebol, Cultura, Jogos e Lúdico Recreativa.