37 - ERGONOMIC ANALYSIS OF CHECKOUT OPERATORS WORKSTATION

MARIELLY GONÇALVES ANACLETO[1]
WILLIAM ALESSANDRO CAMOLESI DA COSTA[2]
ROSEMARA SANTOS DENIZ AMARILLA[3]
RODRIGO EDUARDO CATAI[4]
Universidade Tecnológica Federal do Paraná (UTFPR)
Curitiba - Paraná - Brasil
marielly_ga@hotmail.com[1]
williamcamolesi@hotmail.com[2]
rosemara.deniz@hotmail.com.br[3]
catai@utfpr.edu.br[4]

doi:10.16887/87.a1.37

1. INTRODUCTION

Due to competition between companies in this globalized scenario and the modernization tendencies because of competitiveness, consumers demand a faster and more efficient service in supermarkets. In response to the customers' needs, suppliers look for more productivity, which result in workplaces more industrialized, mechanized or automated, although it may create harmful conditions to worker's health.

Among many occupations that has been studied by ergonomics professionals, the supermarket checkout operation can be highlighted due to body postures adopted by operators during working hours, exposing them to ergonomic risks. Researches relate that supermarket checkout operators' complaints are related to musculoskeletal problems, headaches, sleep disorders and appetite, anxiety and eyestrain (BATIZ et al. 2009; TEIXEIRA et al., 2009). According to Semensato (2011), employers seek productivity and efficiency without worrying about the ergonomic design, which needs different tools to buid a safe and comfortable workspace.

Ergonomics is concerned with the interaction between man and work, always analyzing the various factors that influence the production process of the system as a whole, focused to minimize the harmful consequences that may affect workers. Thus, ergonomics application on the workplace is concerned to reduce fatigue, stress, errors and accidents at work, providing security, satisfaction and health to employees, during the interaction with the productive system (IIDA, 2005). According to Iida (2005), one of the main complaints about the environmental conditions is excessive occupational noise that compromises the quality of the work environment.

One of the methods to evaluate the work environment is through an ergonomic analysis of the work (EAW) based in regulatory standards NR15 and NR17, this method can be applied in the whole system or in a part of it. If it is in a part of the system, the ergonomic approach investigates the task, posture, worker movements and the physical and cognitive demands (IIDA, 2005). Under Brazilian legislation, the regulatory standard NR 17, in Appendix I, aims to establish parameters and minimum guidelines to suit the working conditions of checkout operators, in order to prevent health and safety problems related to work (BRAZIL, 2016a).

Based on this context, the purpose of this research is to provide an ergonomic analysis (EAW) in checkout operators workplace in a supermarket in the city of Curitiba. Using the regulatory standards NR15 (Activities and Unhealthy Operations) and NR17 (Ergonomics), which dictate requirements and procedures for the identification of critical factors that affect the working environment and the ergonomic postures adopted by operators.2. LITERATURE REVIEW

The ergonomic analysis applied in the workplace should include verification of tools, furniture, fixtures and equipment, activities environment, position and worker movement (BRAZIL, 2016a). An important method for identifying one of the main problems that affect workers health in recent decades, characterized as Musculoskeletal Disorders Related to Work (MDRW). For the authors Major and Vezina (2015), it is widely known that there is sufficient need for a multidimensional approach in the workplace in order to understand the musculoskeletal disorders in workers.

Researchers and ergonomics professionals say that Musculoskeletal Disorders Related to Work (MDRW) have become a cause for concern throughout the world, as they are responsible for a significant portion of all workplace accidents, which reaches considerably countries economy, for reasons of direct and indirect medical expenses, and lost productivity, costing between 0.5 and 2% of Gross Domestic Product (VESELINOVIC et al., 2016). The authors also report that ergonomic early interventions can avoid losses for employees and employers.

According to Iida (2005), the Nordic questionnaire helps in the identification of musculoskeletal disorders, in a quick and inexpensive way, allowing an initial survey of the situations that require a deeper analysis and corrective actions, the author points out that the questionnaire should not be used as a basis for clinical diagnosis. This instrument of data collection is limited in multiple or binary choices of the pain occurrence in the more common anatomical regions. Respondents must present their complaints related to body aches, considering the symptoms that appeared in the previous twelve months and seven days prior to the interview, and should expose the absence from routine activities of the last year worked (Pinheiro et al. 2002).

Regarding to occupational noise analysis, NR15 Regulatory Standard considers unhealthy activities and operations that, by its nature or working conditions, expose workers to harmful agents to health, above the tolerance limits. NR15 means for tolerance limit concentration or maximum or minimum intensity, related to the nature and duration of exposure to the agent that will not cause damage to the individuals' health during their working life. Annex I of NR15, shows the tolerance limits without causing harm to workers' health (BRASIL, 2016b).

3. MATERIALS AND METHODS

The methodology consisted of interviews with twenty checkout operators of a supermarket company in the city of Curitiba, Paraná; selected randomly, they were asked about their gender, work hours, break time for meals and rest, problems related to medical reasons, diagnosis of occupational diseases and opinions related to the workplace furniture. Simultaneously, the Nordic questionnaire of musculoskeletal symptoms (Figure 1) was applied, in which the employees identified in body map the regions in which they had pain, discomfort and numbness during the last 12 months. Moreover, measurements were made of the noise intensities with a portable device, of the brand Peak Tech 8000, near the operators' ear in two separate periods daily for seven days. At the end, the dimensions of all the workspace elements were checked, with a measuring tape and the data were recorded. Among these elements are the useful space of the worker, used chair model, the countertop surface material, footrest

and range lines (side and front).



Nordic Questionnaire of musculoskeletal symptoms

Mark an X in the appropriate response. Mark only one X for each question.
No, indicates comfort, health - Yes, indicates annoyances, discomfort, pain in this body region.
ATTENTION: the drawing is only an approximate position of the body parts. Check the part that is closest to your problem.

Body parts with problems	Did you have any problem in the last 7 days?	Did you have any problem in the last 12 months?	Did you have to stop working some day in the last 12 months because of the problem?
1 - Neck	1 □ No 2 □ Yes	1 □ No 2 □ Yes	1 □ No 2 □ Yes
2 - Shoulders	1 □ No 2 □ Yes - right shoulder 3 □ Yes - left shoulder 4 □ Yes - both shoulders	1 □ No 2 □ Yes - right shoulder 3 □ Yes - left shoulder 4 □ Yes - both shoulders	1 □ No 2 □ Yes
3 - Elbows	1 □ No 2 □ Yes - right elbow 3 □ Yes - left elbow 4 □ Yes - both elbows	1 □ No 2 □ Yes - right elbow 3 □ Yes - left elbow 4 □ Yes - both elbows	1 □ No 2 □ Yes
4- Wrists and hands	1 □ No 2 □ Yes - right wrist/hand 3 □ Yes - left wrist/hand 4 □ Yes - both wrists/hands	1 □ No 2 □ Yes - right wrist/hand 3 □ Yes - left wrist/hand 4 □ Yes - both wrists/hands	
5 - Upper back	1 □ No 2 □ Yes	1 □ No 2 □ Yes	1 □ No 2 □ Yes
6 - Low back	1 □ No 2 □ Yes	1 □ No 2 □ Yes	1 □ No 2 □ Yes
7 - Hips or thigs	1 □ No 2 □ Yes	1 □ No 2 □ Yes	1 □ No 2 □ Yes
8 - Knees	1 □ No 2 □ Yes	1 □ No 2 □ Yes	1 □ No 2 □ Yes
9 - Ankles or feet	1 □ No 2 □ Yes	1 □ No 2 □ Yes	1 □ No 2 □ Yes

4. RESULTS AND DISCUSSION

The predominant profile of the checkout operators, inside the analyzed supermarket were female (70%). With the applied questionnaires, it was verified that 100% of employees in the survey consider the work extremely repetitive, and of these, 90% characterized it as tiring.

In the studied supermarket, the working time was eight hours, with the interval for meals (one hour) and two predetermined breaks of fifteen minutes within this time. Even with the small breaks, at the end of the day, 90% of them have some kind of musculoskeletal discomfort. According to the applied Nordic questionnaire of musculoskeletal symptoms, the pains that affect professionals in this job are located in the neck, shoulder, wrist and hand, dorsal and lumbar spine, knees, ankles, and feet. The medical diagnosis of occupational disease was already attested in 15% of employees surveyed, but only 5% were removed. However, fear of losing their jobs was justified by the employees of this study for them not to get a release, being this a major problem for the diagnosis and treatment of MDRW.

Operators associated the symptomatology to various factors. One of them are the environmental conditions within the workspace, called internal factors. Lighting, ventilation, noise, temperature, and vibration are agents that influence directly on performance and employee well-being. In this study in particular, the noise that operators were submitted were analyzed.

It was possible to realize that the busiest days are Friday and Sunday, in the late afternoon periods, the fact that Tuesday showed high noise level is probably because of it is a lower prices day in this market. According to NR 15, which governs about the intermittent and continuous noise, the maximum noise level allowable for 8 hours daily exposure is 85 decibels. Because the maximum value obtained in this study was 69.82 dB (A), it is observed that this job is within the pre-established standards.

4.1 ANTHROPOMETRIC ANALYSIS AND FURNITURES

The operators work consists in reaching and packaging goods, control panel activation, bar code typing and/or quantities, withdrawal of receipt, among other developed functions in orthostatic and static positions, requiring rotational movements, body lateral and anterior inclination, especially when the operator is in the first position, arm elevation, among others.

As the causes of pain, besides the combination of posture and movements, one can also cite inadequate furniture, handling products that are sometimes heavy, prompting a greater muscular effort. Harmful factors from improper furniture are due to the fact that operators carry out their functions in jobs that have standardized designs and therefore do not take into account individual anthropometric differences.

The standard states that the working surface, as the stands, must have height compatible with the type of activity to be held. In this situation, it has fixed height of 90 cm, which is considered low for functions performed frequently by operators as opening the drawer, taking notes and cleaning station; furthermore, it is necessary to contain rounded edges to prevent industrial accidents and opaque surface. The latter feature is incompatible, once it presents a metal surface, which causes annoying reflections in front of the operator.

The chair and the feet support, used by operators meet the terms established in NR17. The chair has a variable height seat and backrest for lumbar support, adjustable to the height of the worker and rounded edges. However, according to the employees, some are broken or have some defect, decreasing its quality and increasing the chance of health damages.

4.1.1. SUGGESTIONS FOR IMPROVEMENTS

The ideal for the workstation design, specifically the counter, is to take into account the individual anthropometries, or that the counter has possibility of adjustments to fit the operator who will use it. Another action is to group employees with similar characteristics to take turn at the station, to enable the design as a pattern of people who will use it.

In order to provide more comfort and facilitate the operator movement the distance between counters could be adjusted. The bar code typing keyboard and units as well as the footrest could present different inclinations, adjusting to the operator's height. The workflow of the checkout operator can be decreased with the addition of another employee for the merchandise packaging, or incentive the customer to perform this procedure.

With the purpose of developing an ergonomic work station, the authors of this paper developed a new prototype (Figure 3) from the stands used by operators, represented in Figure 2. Modifications are highlighted on the equipment provisions beyond the introduction of new technologies, such as the scanner Rapid Scan Till, a scanner laser with a range of 360 degrees

used to automatically read the bar code. In addition to this, the previous conventional keyboard was substituted for a touchscreen panel with variable inclination, in order to adapt to the height of the operator. The first technology objectives to prevent the operator's body torsional motion, weight lifting and other actions resulting from the action performed to read the bar code. The second aims to reduce musculoskeletal problems such as repetitive strain injury (RSI), caused by repetitive movements, at this situation, it is when typing

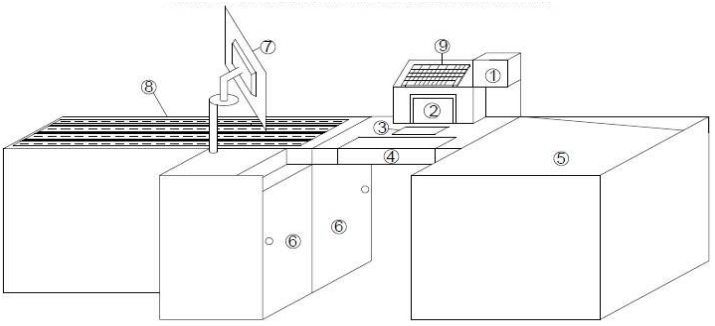

1- Printer
2- Vertical Optical Reader
3- Balance
4 - Cash Drawer
5- Packing
6- Cabinet
7- Monitor
8- Running machine
9- Typing panel

Figure 2 - Prototype of the analyzed post. Source: The authors (2016).

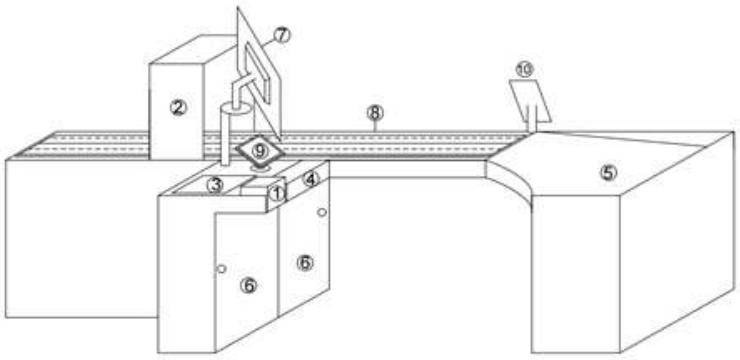

1- Printer
2- Rapid Scan Till
3- Balance
4 - Cash Drawer
5- Packing
6- Cabinet
7- Monitor
8- Running machine
9- Typing panel
10- Card Machine

Figure 3 – New ergonomic prototype. Source: The authors (2016)

Allied to the counter is the use of retractable or folding chair, because it meets APPENDIX 1 requirements of NR17 and has the foldable backrest allowing its placement under the stand when the operator is standing, optimizing space and facilitating handling. Remembering that the use of this is linked to the use of the footrest.

5. CONCLUSION

With all the data, the physical values of the workspace, average noise levels measured on site, the information obtained from the interviews and the Nordic questionnaire, it is possible to assume some conclusions on the subject.

Some aspects, especially environmental conditions, obtained a good result, such as noise, where the daily average values were below the maximum allowed by the regulatory standard NR15. However, related to the physical aspect of the workplace, the authors perceived that several problems might affect the comfort and well-being of the checkout operator. Among these annoyances, it is possible to mention and emphasize the furniture as the main cause. The furniture follows pre-established anthropometric standards; therefore, it is ineffective in meeting the physical profile of each individual.

Towards the study, suggestions for the furniture improvement were elaborated, through the development of a new prototype that improves ergonomically this workstation. In addition, it was suggested changes in attitudes and routine of employees, such as the practice of daily labor activities evolving all operators. Thus, once the workstation problems are pointed out and proposals for improvements are put into practice, employees may work with more comfort, health, welfare, and feel more motivated to perform their task.

REFERENCES

BATIZ, E. C.; SANTOS, A. F.; LICEA, O. E. A. A postura no trabalho dos operadores de checkout de supermercados: uma necessidade constante de análises. Produção, v. 19, n. 1, p. 190-201, 2009.

BRASIL. Ministério do Trabalho e Emprego. NR 15 – Atividades e Operações Insalubres. Disponível em: < http://trabalho.gov.br/seguranca-e-saude-no-trabalho/normatizacao/normas-regulamentadoras/norma-regulamentadora-n-15-atividades-e-operacoes-insalubres>. Acesso em: 16/10/2016b.

BRASIL. Ministério do Trabalho e Emprego. NR 17 - Ergonomia. Disponível em: < http://trabalho.gov.br/seguranca-e-saude-no-trabalho/normatizacao/normas-regulamentadoras/norma-regulamentadora-n-17-ergonomia>. Acesso em: 16/10/2016a.

IIDA, I. Ergonomia: Projeto e Produção. 2º edição rev. e ampliada. São Paulo. Editora Edgard Blucher, 2005.

MAJOR, M. E.; VEZINA, N. Analysis of worker strategies: A comprehensive understanding for the prevention of work related musculoskeletal disorders. International Journal of Industrial Ergonomics 48, p. 149-157, 2015.

PINHEIRO, F. A.; TRÓCCOLI, B. T.; CARVALHO, C. V. Validação do Questionário Nórdico de Sintomas Osteomusculares como medida de morbidade. Rev Saúde Pública, 36(3): p. 307-12, 2002.

SEMENSATO, C. B. Análise Ergonômica e Intervenções nos Postos de Trabalho de Operadores de Caixa de Supermercado (Checkout). 2011. Dissertação. (Mestrado em Design) Universidade Estadual Paulista "Júlio de Mesquita Filho", Campus de Bauru.

TEIXEIRA, C. S.; TORRES, M. K. L.; MORO, A. R. P.; MERINO, E. A. D. Fatores associados ao trabalho de operadores de checkout: investigação das queixas musculoesqueléticas. Produção, v. 19, n. 3, p. 558-568, 2009.

VESELINOVIC, S. P.; HEDGE, A. H.; VESELINOVIC, M. An ergonomic expert system for risk assessment of work-related musculo-skeletal disorders. International Journal of Industrial Ergonomics 53, p. 130-139, 2016.

ERGONOMIC ANALYSIS OF CHECKOUT OPERATORS WORKSTATION

ABSTRACT

The purpose of this study was to develop an ergonomic analysis at checkout operators' workspace, located in Curitiba, Paraná. Periodic visits were made to the establishment, with application of questionnaires to employees, analyzes of noise and furniture. Environmental conditions observed showed the deficiency in the physical arrangement and organization of the workspace in addition, the workplace does not provide comfort for workers in their jobs. From the questionnaire, the operators profile were obtained and was possible to quantify the main operators' complaints, in which prevailed the associated furniture. With the results of this study was drawn up an ergonomic prototype of the workspace, to meet Appendix I of the regulation NR17, ensuring the conditions of service and comfort, in addition to the health and safety of users.

Keywords: Ergonomic analysis; Occupational noise; Checkout operators.

ANALYSE ERGONOMIQUE DU TRAVAIL DES OPÉRATEURS DE CAISSE

RÉSUMÉ

L'article suivant se concentrera sur une analyse ergonomique du travail des opérateurs de caisse situé dans la ville de Curitiba, état du Paraná. Des visites périodiques ont été effectuées dans l'établissement et des questions sur les bruits de l'environnement et sur l' ameublement ont été posées aux employés. Les conditions environnementales observées montrent la défaillance dans l'arrangement physique, ainsi que dans l'organisation de l'espace de travail qui n'offre pas de confort aux travailleurs dans l'exercice de leurs fonctions. A partir du questionnaire apliqué, il a été possible d'obtenir le profil des opérateurs et aussi de quantifier ses principales réclamations liées à l'ameublement. Grâce au résultat de ce travail, il a été produit un prototype ergonomique de la station de travail, afin de répondre à l'annexe I de la norme réglementaire NR17, en garantissant les conditions de service et de confort, ainsi que la santé et la sécurité des utilisateurs.

Mots Clés: Analyse ergonomique; Bruit au travail; Opérateurs de caisse.ANÁLISIS ERGONÓMICA DEL PUESTO DE TRABAJO DE LOS OPERADORES DE CAJA

RESUMEN

Este artículo tiene como objetivo desarrollar una análisis ergonómica en el ambiente de trabajo de los operadores cajá en un supermercado, que se encuentra en Curitiba, Paraná. Para obtener los datos se realizaron visitas periódicas al establecimiento con aplicaciones de cuestionarios a los empleados, el análisis de ruido y muebles. Las condiciones ambientales observadas mostraron la deficiencia en la disposición física y en la organización del trabajo, además del ambiente no ofrece comodidad para los trabajadores en sus funciones. A partir de la aplicación del cuestionario, haya obtenido el perfil de los operadores y podrían cuantificar las principales quejas por ellos, que prevaleció el mobiliário. Con los resultados de este estudio elaboró un protótipo ergonómico del puesto de trabajo, para cumplir con el Anexo I de la regulación NR17, asegurando las condiciones de servicio y confort, además de la salud y la seguridad de los usuários.

Palabras clave: Análisis ergonómico; Ruido ocupacional; Operadores caja.

ANÁLISE ERGONÔMICA DE POSTO DE TRABALHO DE OPERADORES DE CHECKOUT

RESUMO

Este artigo tem como objetivo desenvolver uma análise ergonômica no ambiente de trabalho de operadores de checkout em um supermercado, situado na cidade de Curitiba, Paraná. Para a coleta de dados foram realizadas visitas periódicas ao estabelecimento com aplicações de questionários aos funcionários, análises de ruído e do mobiliário. As condições ambientais observadas mostraram a deficiência no arranjo físico e na organização do espaço de trabalho, além do ambiente não oferecer conforto aos trabalhadores em suas funções. A partir do questionário aplicado, obteve-se o perfil dos operadores e puderam-se quantificar as principais queixas relatadas por eles, onde prevaleceram às associadas ao mobiliário. Com os resultados deste estudo elaborou-se um protótipo ergonômico do posto de trabalho, visando atender o Anexo I da norma regulamentadora NR17, garantindo as condições de serviço e conforto, além da saúde e segurança dos usuários.

Palavras chave: Análise ergonômica; Ruído ocupacional; Operadores de checkout.